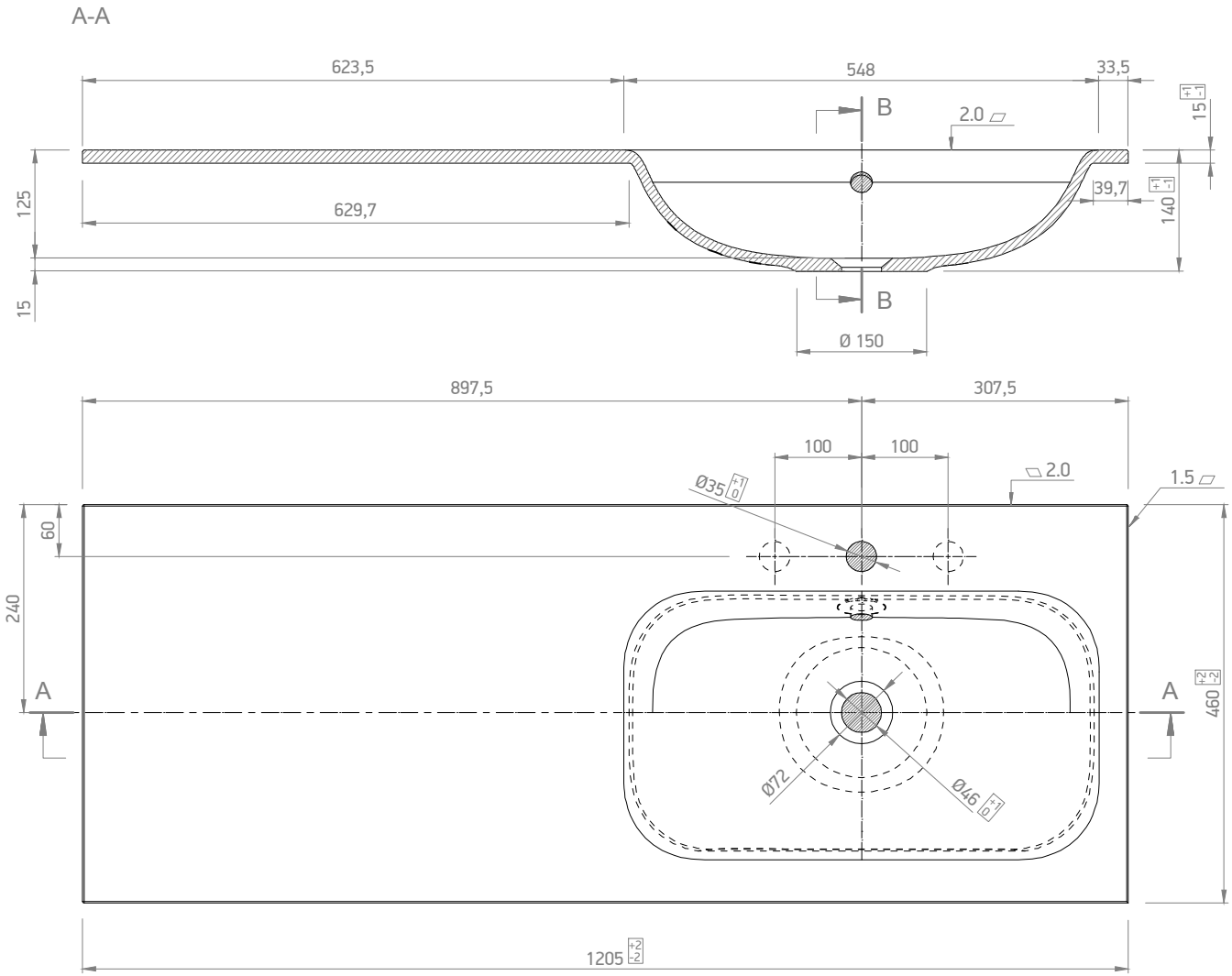

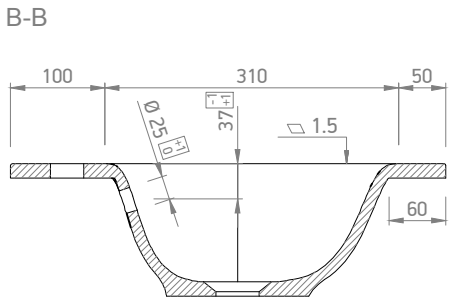

MARMY	www.marmy.eu	Name: **ASPEN 120x46 RIGHT**
		Item NR.: 80 7288 12 21 10
Weight: 16 kg	Visible height: 1,5 cm	Scale: 1:8